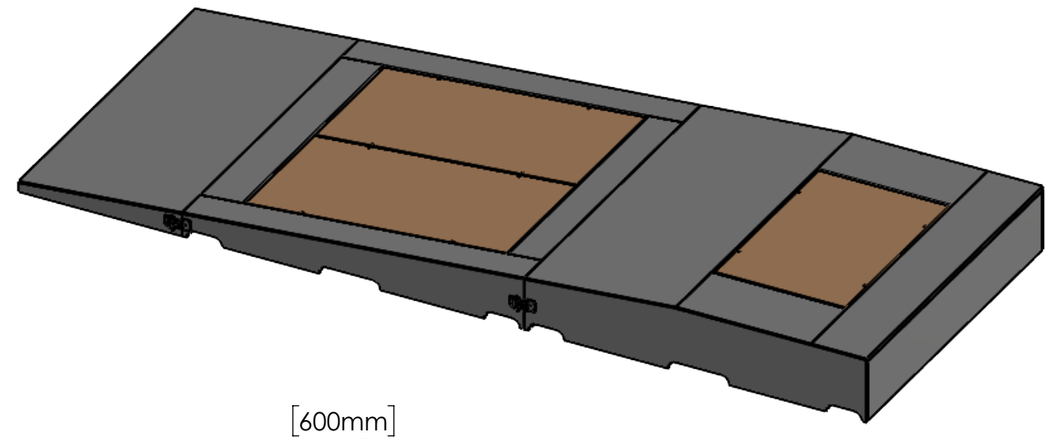

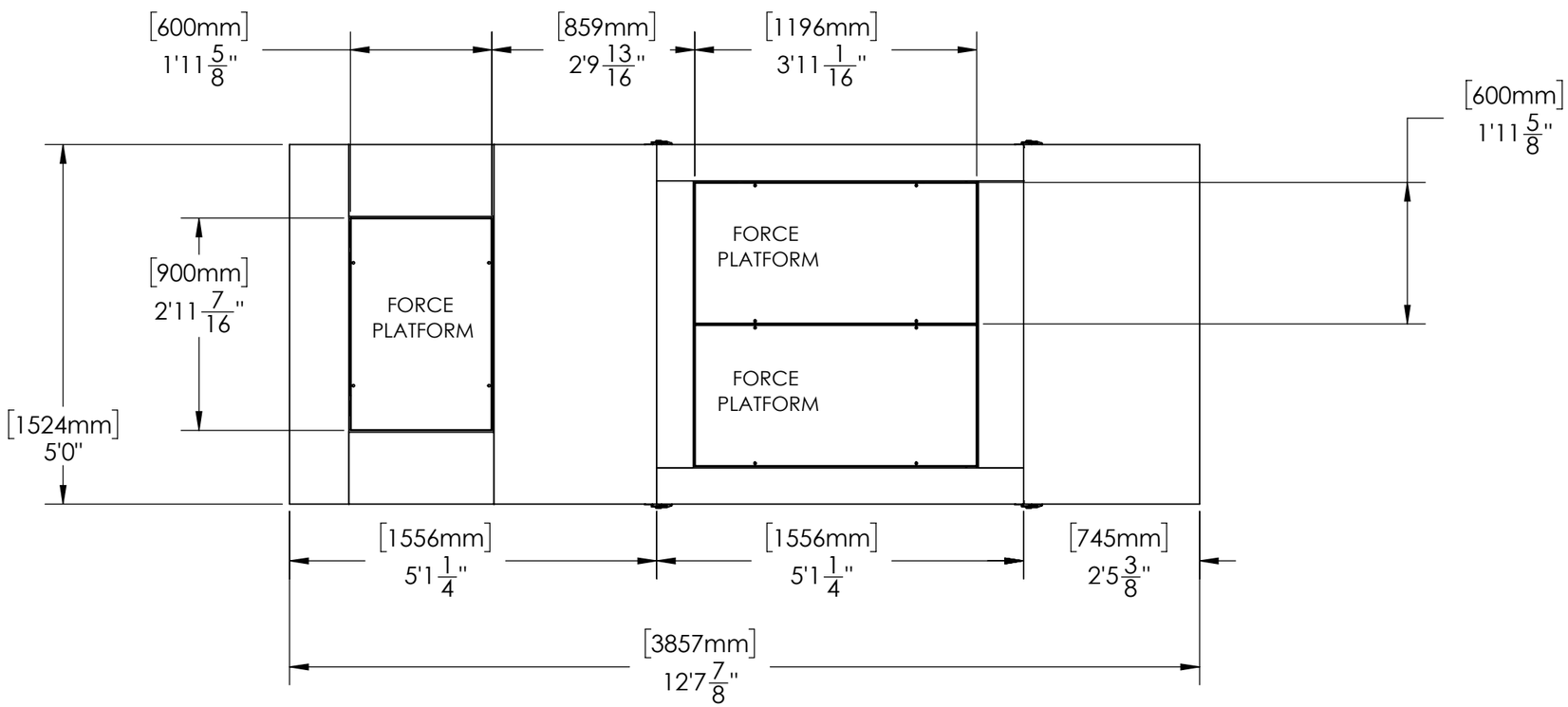

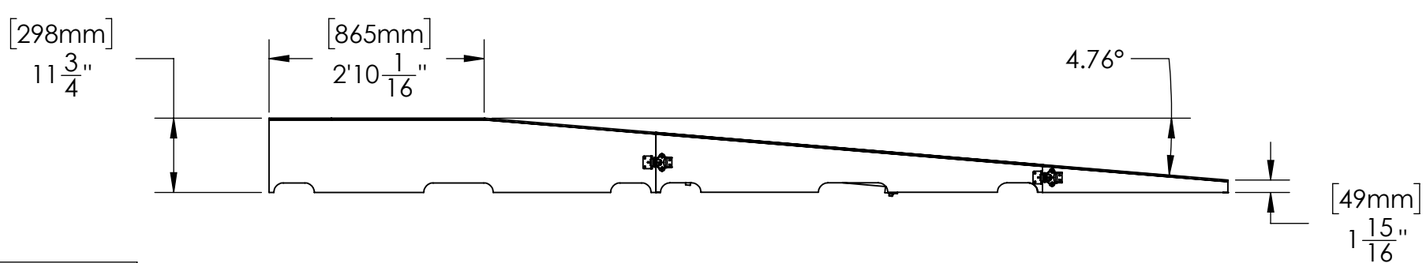

PROPRIETARY AND CONFIDENTIAL

THE INFORMATION CONTAINED IN THIS DRAWING IS THE SOLE PROPERTY OF AMTI. ANY REPRODUCTION IN PART OR AS A WHOLE WITHOUT THE WRITTEN PERMISSION OF AMTI IS PROHIBITED.

AMTI

TITLE: MOBILE MOUND TOP LEVEL

PITCHER MOUND WITH PLATES

SIZE	DWG. NO.	REV
B	MPM-41902	A
SCALE: 1:24	WEIGHT:	SHEET 1 OF 1

PRINTED COPIES ARE NOT CONTROLED UNLESS MARKED: INITIALS_____